westerbergs
afton & gryning
600, 800, 1000

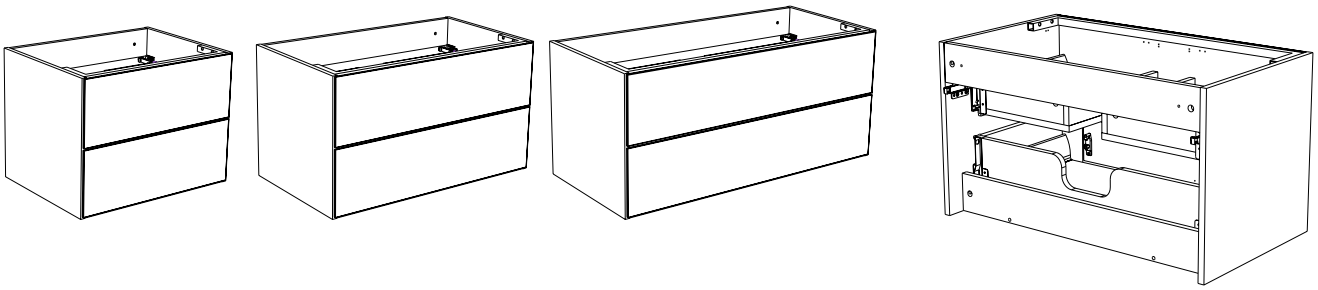

	600	800	1000
A	520	728	936
B	455	655	855
C	568	768	968
D	600	800	1000

[mm]

TOP

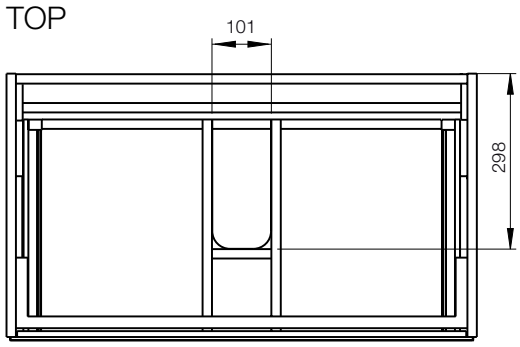

SIDE

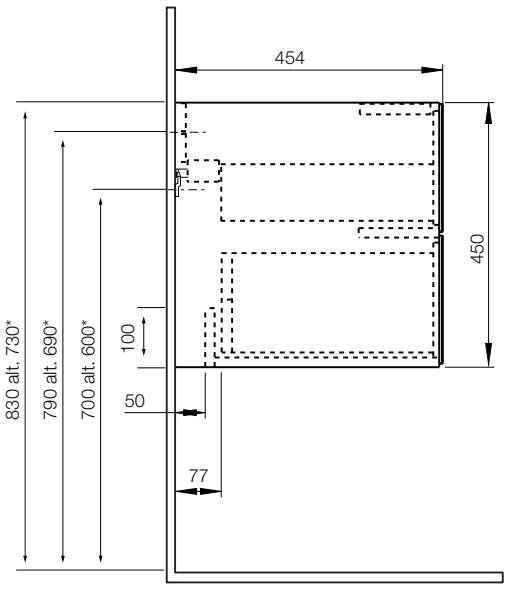

BACK

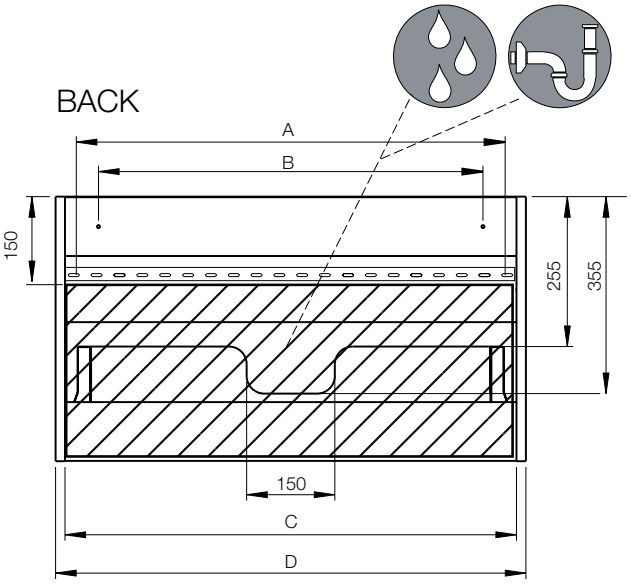

* Recommended positions for under cabinets with integrated wash basin alt. countertop with sit-on basin

Art nr. 20071200, 20071201, 20071202, 20071203, 20071204, 20071205, 20071206, 20071207, 20071210, 20071211, 20071212, 20071213, 20071214, 20071215, 20071216, 20071217, 20071220, 20071221, 20071222, 20071223, 20071224, 20071225, 20071226, 20071227, 20071240, 20071241, 20071242, 20071243, 20071250, 20071251, 20071252, 20071253, 20071260, 20071261, 20071262, 20071263 Westerbergs Badrum part of Hafa Bathroom Group AB.